GENERAL:

1. READ STRUCTURAL DRAWINGS IN CONJUNCTION WITH ALL OTHER CONTRACT DRAWINGS AND DOCUMENTS. REPORT ANY CONFLICTS TO THE ENGINEER BEFORE COMMENCING WORK
2. VERIFY ALL DIMENSIONS AND ELEVATIONS PRIOR TO CONSTRUCTION.
3. NOTIFY THE ENGINEER 48 HOURS IN ADVANCE FOR INSPECTION OF STRUCTURAL CONNECTIONS BEFORE COVERING UP.
4. CONTRACTOR'S RESPONSIBILITY: THESE DRAWINGS SHOW COMPLETED STRUCTURAL COMPONENTS OF THE DOCKS. THE REQUIRED TEMPORARY BRACING AND SHORING TO PERFORM THE WORK SAFELY IS THE RESPONSIBILITY OF THE CONTRACTOR.
5. ENVIRONMENTAL WORK PROCEDURES, TIMING AND SPECIAL PRECAUTIONS SHALL BE IN ACCORDANCE WITH THE REQUIREMENTS AND LIMITATIONS OF THE FEDERAL DEPARTMENT OF FISHERIES AND OCEANS, AND THE PROVINCIAL MINISTRY OF WATER, LAND AND AIR PROTECTION.
6. DIMENSIONS ARE IN MILLIMETRES AND ELEVATIONS ARE IN METRES, UNLESS OTHERWISE NOTED.
7. HORIZONTAL DATUM U.T.M NAD 83.
8. VERTICAL DATUM (ELEVATIONS AND CONTOURS) TO CHART DATUM (C.D.).
9. TIDE ELEVATIONS AT THE SITE ARE BASED ON VALUES PUBLISHED BY THE CANADIAN HYDROGRAPHIC SERVICE (CHS) FOR THE SITE AS FOLLOWS:

HIGHER HIGH WATER, LARGE TIDE (H.H.W.L.T.)	5.1 METRES
HIGHER HIGH WATER, MEAN TIDE (H.H.W.M.T.)	4.6 METRES
MEAN WATER LEVEL (M.W.L.)	3.2 METRES
LOWER LOW WATER, MEAN TIDE (L.L.W.M.T.)	1.3 METRES
LOWER LOW WATER, LARGE TIDE (L.L.W.L.T.)	0.1 METRES

10. SUBMIT SHOP DRAWINGS FOR REVIEW PRIOR FABRICATION.

ABBREVIATIONS:

CL.	–	CLEAR
C	–	CENTRELINE
CP.	–	COMPLETE PENETRATION
C/W	–	COMPLETE WITH
DWG.	–	DRAWING
EL.	–	ELEVATION
I.D.	–	INSIDE DIAMETER
LLH	–	LONG LEG HORIZONTAL
LLV	–	LONG LEG VERTICAL
MAX.	–	MAXIMUM
MIN.	–	MINIMUM
N.T.S.	–	NOT TO SCALE
OPP.	–	OPPOSITE
PL	–	PLATE
R	–	RADIUS
SIM.	–	SIMILAR
S.S.	–	STAINLESS STEEL
T.O.	–	TOP OF
TYP.	–	TYPICAL
U/S	–	UNDERSIDE
U.N.O.	–	UNLESS NOTED OTHERWISE
WP	–	WORK POINT

KEY PLAN
1:1000

DRAFT FOR CLIENT REVIEW
2023.03.03

ISSUED FOR REPORT

NOT FOR CONSTRUCTION

ISSUES

No.	DATE YYYY.MM.DD	ISSUED FOR	No.	DATE YYYY.MM.DD	ISSUED FOR	No.	DATE YYYY.MM.DD	ISSUED FOR
A	2023.02.08	CLIENT REVIEW						

© Copyright reserved. This drawing remains the exclusive property of Herold Engineering Limited and may not be reused or reproduced without written consent of Herold Engineering Limited.

SUB CONSULTANT

DRAFTED: PHU
DRAFTING REVIEW
DESIGNED: SPS
DESIGN REVIEW

HEROLD ENGINEERING
3701 Shenton Rd, Nanaimo, BC V9T 2H1
Tel: 250-751-8558 Fax: 250-751-8559
Email: mail@heroldengineering.com

ENGINEERS SEAL

WEST BAY:
GENERAL NOTES
AND KEY PLAN

PORTS CONDITION ASSESSMENT
WEST BAY, GAMBIER ISLAND
1975 FIELD ROAD SECHELT BC V0N 3A1
SUNSHINE COAST REGIONAL DISTRICT

HEL PROJECT No. 4551-012	CLIENT DWG. No. N/A
SCALE AS SHOWN	PERMIT No. N/A
HEL DRAWING No. S01	REVISION A

DESTROY ALL DRAWINGS SHOWING PREVIOUS REVISION

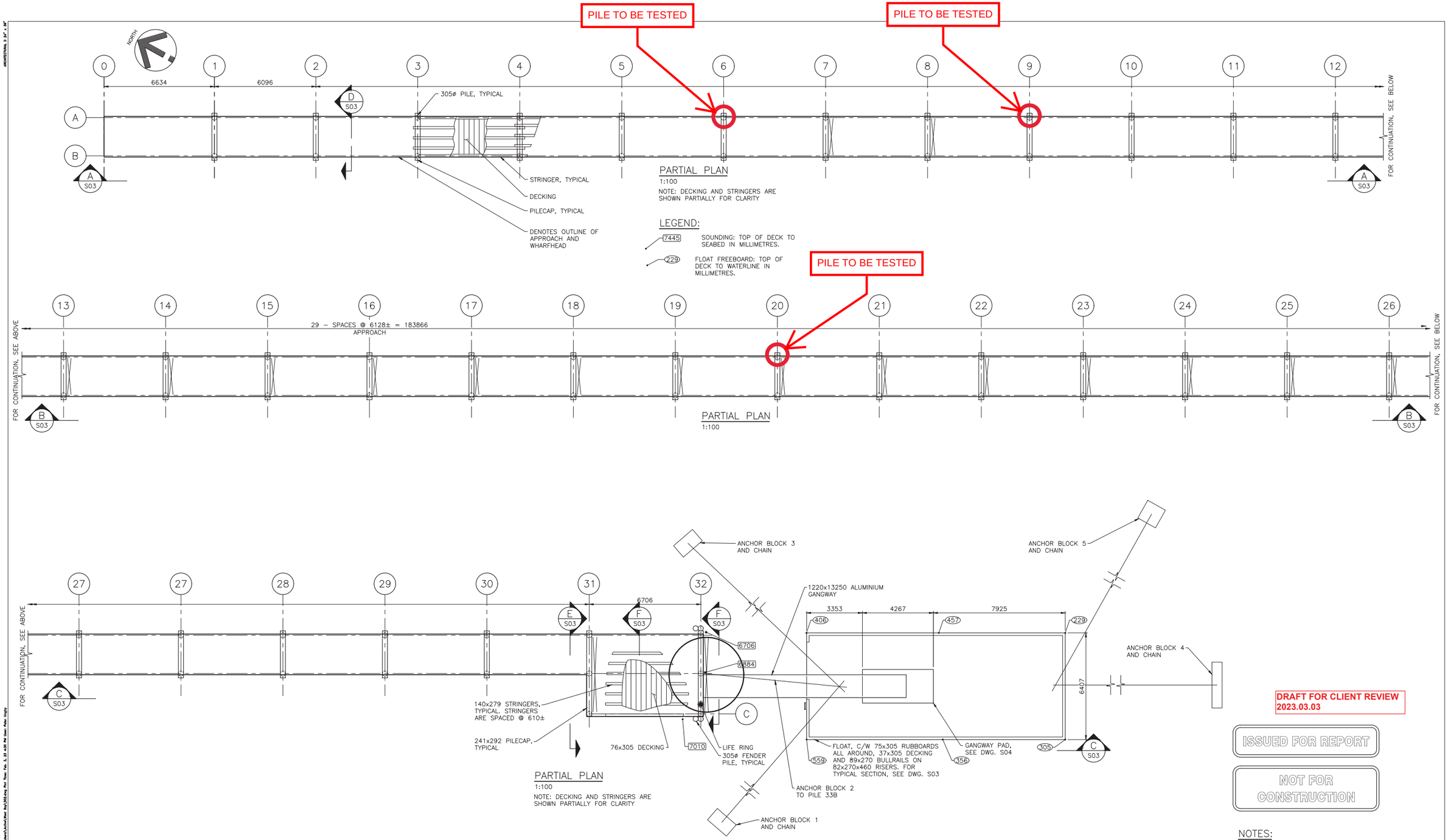

DRAFT FOR CLIENT REVIEW
2023.03.03

ISSUED FOR REPORT

NOT FOR CONSTRUCTION

NOTES:

1. FOR GENERAL NOTES, SEE DWG. S01.
2. ALL DIMENSIONS ARE APPROXIMATE AND ARE TO BE VERIFIED PRIOR TO REMEDIATION/CONSTRUCTION ACTIVITIES

ISSUES											
No.	DATE YYYY.MM.DD	ISSUED FOR	No.	DATE YYYY.MM.DD	ISSUED FOR	No.	DATE YYYY.MM.DD	ISSUED FOR
A	2023.02.08	CLIENT REVIEW						

© Copyright reserved. This drawing remains the exclusive property of Herold Engineering Limited and may not be reused or reproduced without written consent of Herold Engineering Limited.

SUB CONSULTANT

DRAFTED: JJMC
DRAFTING REVIEW
DESIGNED: SPS
DESIGN REVIEW

HEROLD ENGINEERING
3701 Shenton Rd, Nanaimo, BC V9T 2H1
Tel: 250-751-8558 Fax: 250-751-8559
Email: mail@heroldengineering.com

ENGINEERS SEAL

WEST BAY: GENERAL ARRANGEMENT - SHEET 1

PORTS CONDITION ASSESSMENT
WEST BAY, GAMBIER ISLAND
1975 FIELD ROAD SECHELT BC V0N 3A1
SUNSHINE COAST REGIONAL DISTRICT

HEL PROJECT No.	CLIENT DWG. No.
4551–012	N/A
SCALE: AS SHOWN	PERMIT No.: N/A
HEL DRAWING No.: S02	REVISION: A

DESTROY ALL DRAWINGS SHOWING PREVIOUS REVISION

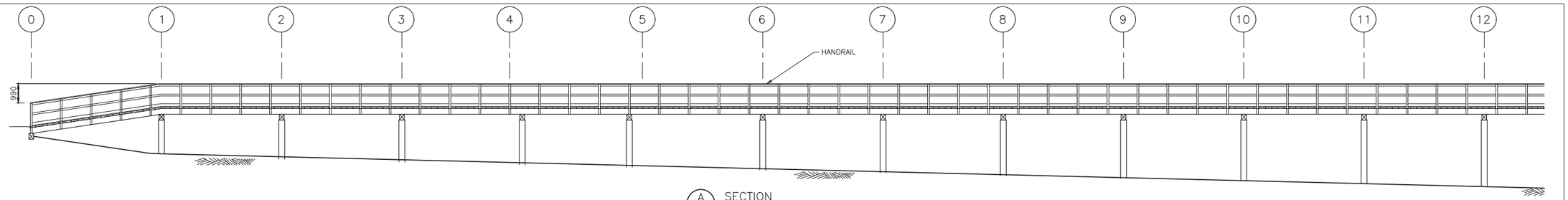

A S02 SECTION 1:100

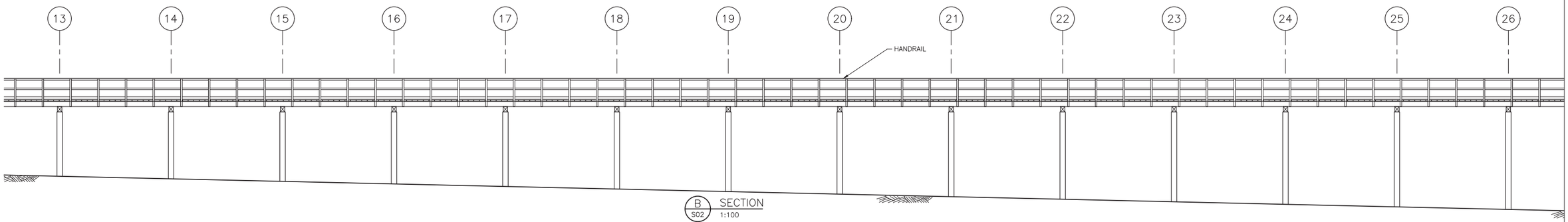

B S02 SECTION 1:100

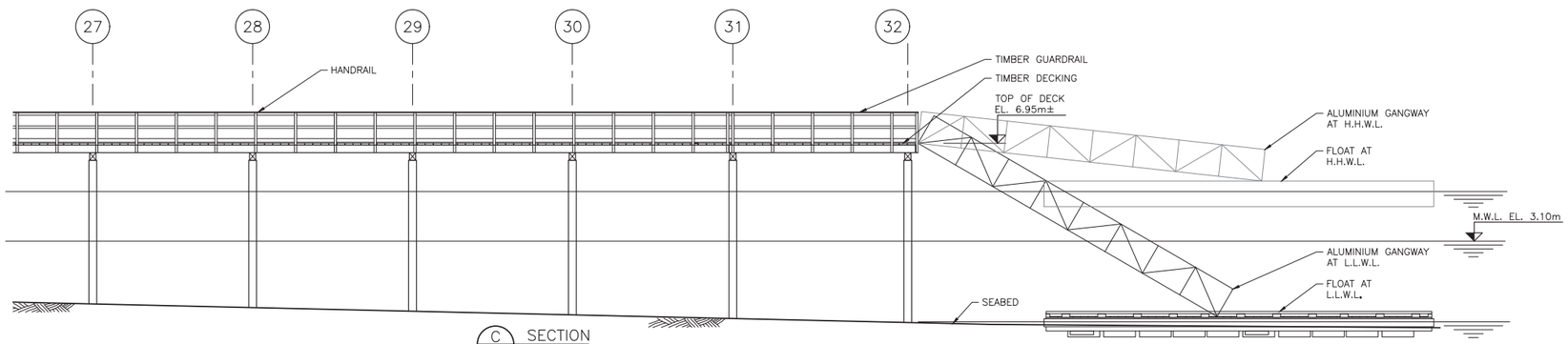

C S02 SECTION 1:100

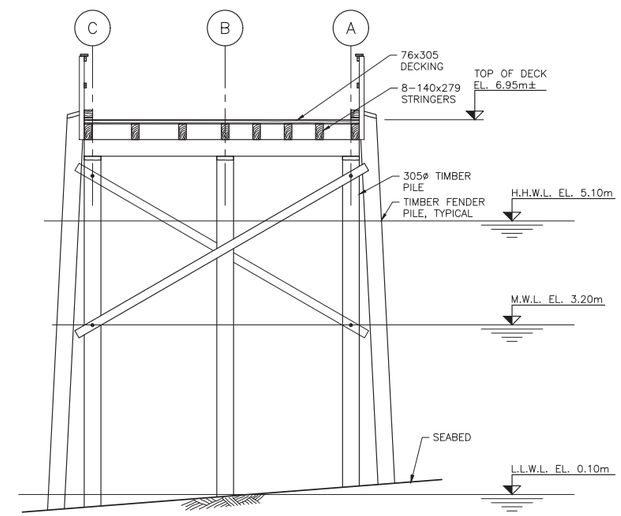

F S02 SECTION 1:50

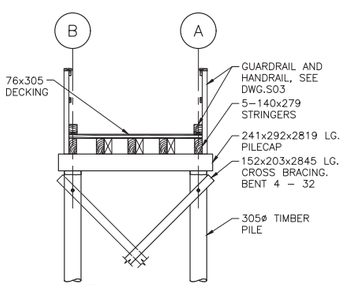

D S02 SECTION 1:50

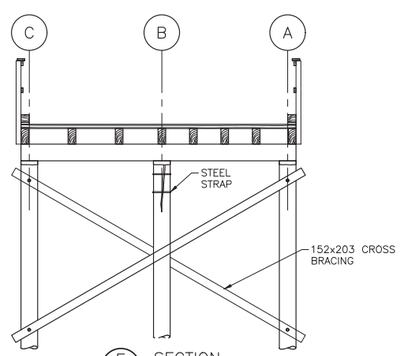

E S02 SECTION 1:50

DRAFT FOR CLIENT REVIEW
2023.03.03

ISSUED FOR REPORT

NOT FOR CONSTRUCTION

NOTES:

1. FOR GENERAL NOTES, SEE DWG. S01.
2. ALL DIMENSIONS ARE APPROXIMATE AND ARE TO BE VERIFIED PRIOR TO REMEDIATION/CONSTRUCTION ACTIVITIES

ISSUES

No.	DATE YYYY.MM.DD	ISSUED FOR	No.	DATE YYYY.MM.DD	ISSUED FOR	No.	DATE YYYY.MM.DD	ISSUED FOR
A	2023.02.08	CLIENT REVIEW						

© Copyright reserved. This drawing remains the exclusive property of Herold Engineering Limited and may not be reused or reproduced without written consent of Herold Engineering Limited.

SUB CONSULTANT

DRAFTED PHU

DRAFTING REVIEW

DESIGNED SPS

DESIGN REVIEW

HEROLD ENGINEERING
3701 Shenton Rd, Nanaimo, BC V9T 2H1
Tel: 250–751–8558 Fax: 250–751–8559
Email: mail@heroldengineering.com

ENGINEERS SEAL

WEST BAY: GENERAL ARRANGEMENT - SHEET 2

PORTS CONDITION ASSESSMENT WEST BAY, GAMBIER ISLAND

1975 FIELD ROAD SECHELT BC V0N 3A1

SUNSHINE COAST REGIONAL DISTRICT

HEL PROJECT No.	CLIENT DWG. No.
4551–012	N/A
SCALE: AS SHOWN	PERMIT No. N/A
HEL DRAWING No. S03	REVISION A

DESTROY ALL DRAWINGS SHOWING PREVIOUS REVISION

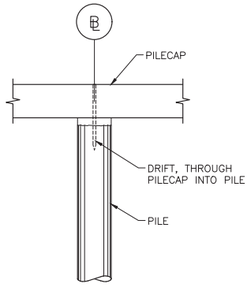

PILE TO PILECAP CONNECTION
1:25

NOTE: STRINGERS, DECKING, AND BRACING NOT SHOWN

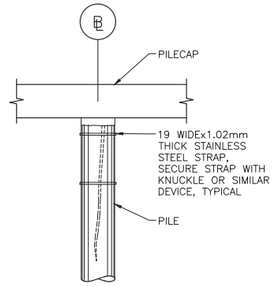

PILE STRAPPING DETAIL
1:25

NOTE: STRINGERS, DECKING, AND BRACING NOT SHOWN

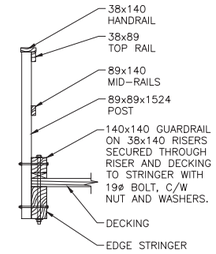

SECTION – HANDRAIL PARALLEL TO STRINGER

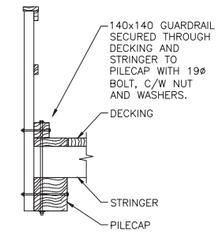

SECTION – HANDRAIL PARALLEL TO PILE CAP

NOTE: SIMILAR TO SECTION – HANDRAIL PARALLEL TO STRINGER, UNLESS NOTED OTHERWISE.

HANDRAIL AND GUARDRAIL DETAILS
1:25

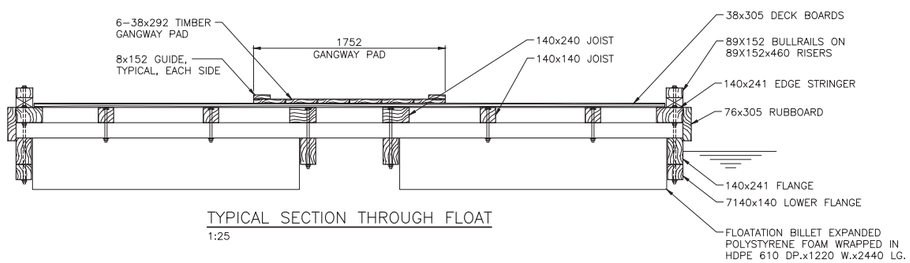

TYPICAL SECTION THROUGH FLOAT
1:25

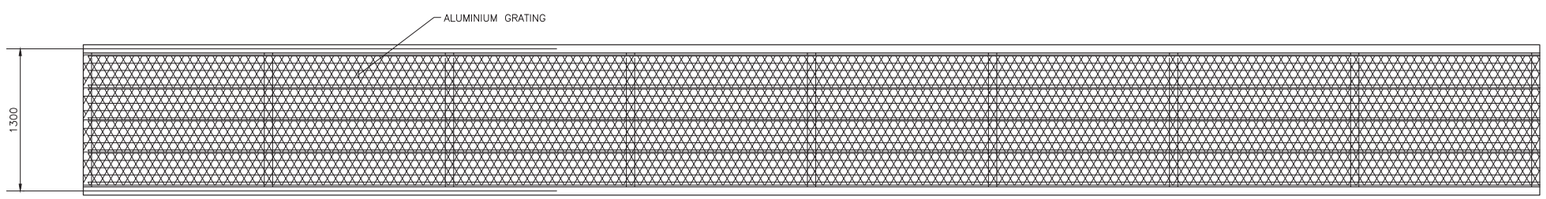

PLAN – ALUMINIUM GANGWAY
1:25

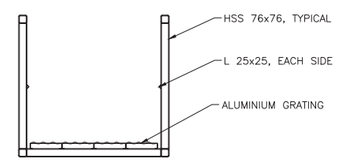

B – SECTION
1:25

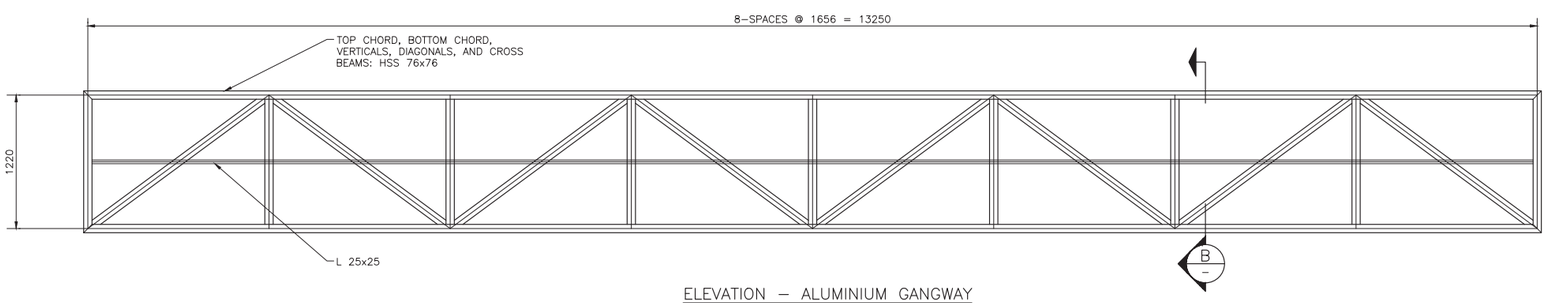

ELEVATION – ALUMINIUM GANGWAY
1:25

DRAFT FOR CLIENT REVIEW
2023.03.03

ISSUED FOR REPORT

NOT FOR CONSTRUCTION

NOTES:

1. FOR GENERAL NOTES, SEE DWG. S01.
2. ALL DIMENSIONS ARE APPROXIMATE AND ARE TO BE VERIFIED PRIOR TO REMEDIATION/CONSTRUCTION ACTIVITIES

ISSUES

No.	DATE YYYY.MM.DD	ISSUED FOR	No.	DATE YYYY.MM.DD	ISSUED FOR	No.	DATE YYYY.MM.DD	ISSUED FOR
A	2023.02.08	CLIENT REVIEW						

© Copyright reserved. This drawing remains the exclusive property of Herold Engineering Limited and may not be reused or reproduced without written consent of Herold Engineering Limited.

SUB CONSULTANT

DRAFTED: PHU
DRAFTING REVIEW:
DESIGNED: SPS
DESIGN REVIEW:

HEROLD ENGINEERING
3701 Shenton Rd, Nanaimo, BC V9T 2H1
Tel: 250-751-8558 Fax: 250-751-8559
Email: mail@heroldengineering.com

ENGINEERS SEAL

WEST BAY: DETAILS

PORTS CONDITION ASSESSMENT
WEST BAY, GAMBIER ISLAND
1975 FIELD ROAD SECHELT BC V0N 3A1
SUNSHINE COAST REGIONAL DISTRICT

HEL PROJECT No. 4551-012	CLIENT DWG. No. N/A
SCALE AS SHOWN	PERMIT No. N/A
HEL DRAWING No. S04	REVISION A

DESTROY ALL DRAWINGS SHOWING PREVIOUS REVISION